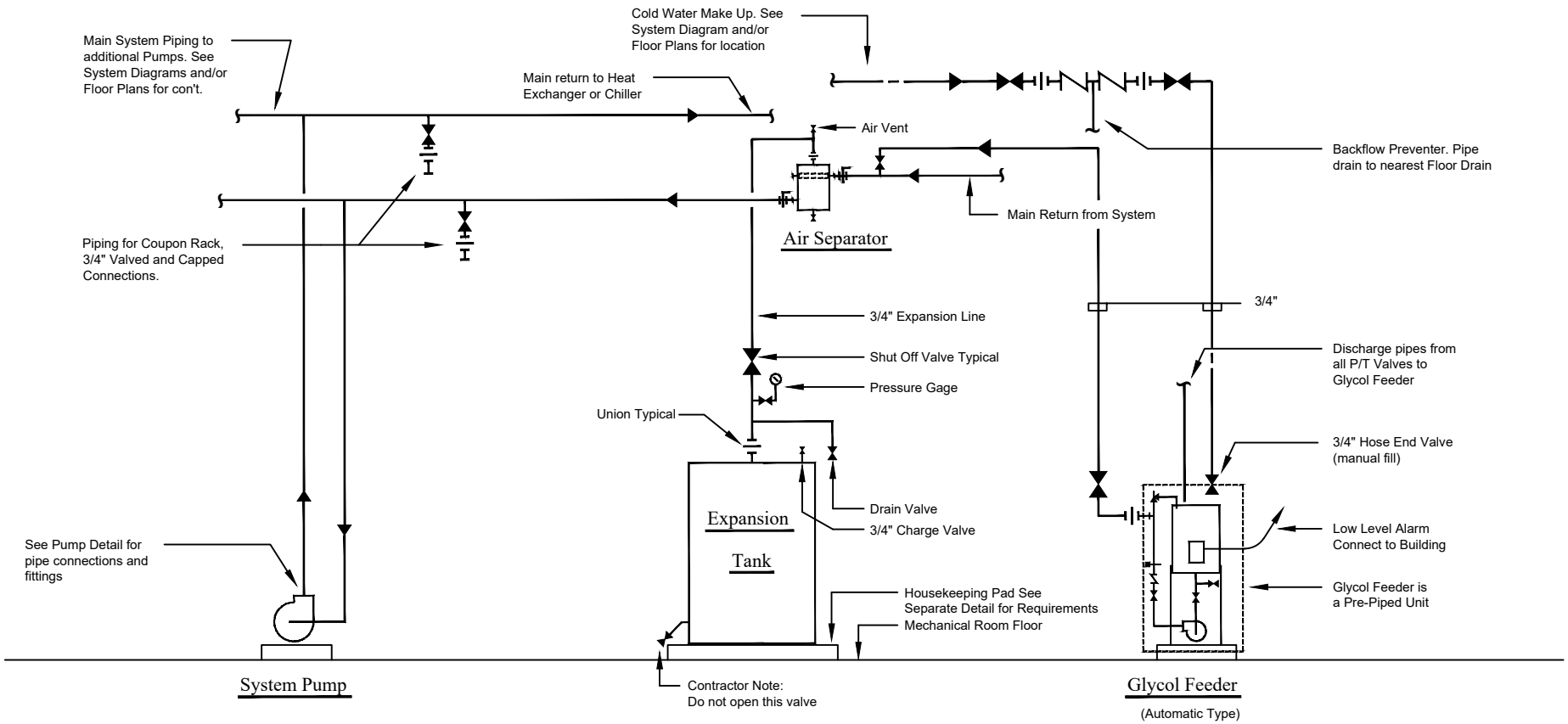

Note:

This Detail is typical for Pre-Heat Systems
and Chilled Water Systems with Glycol
See Valve and Fitting Installation Detail for Additional Requirements

Detail : Expansion Tank & Glycol Feed System

No Scale